SECTION D'UN CUBE

Guillaume CONNAN

Lycée Jean PERRIN

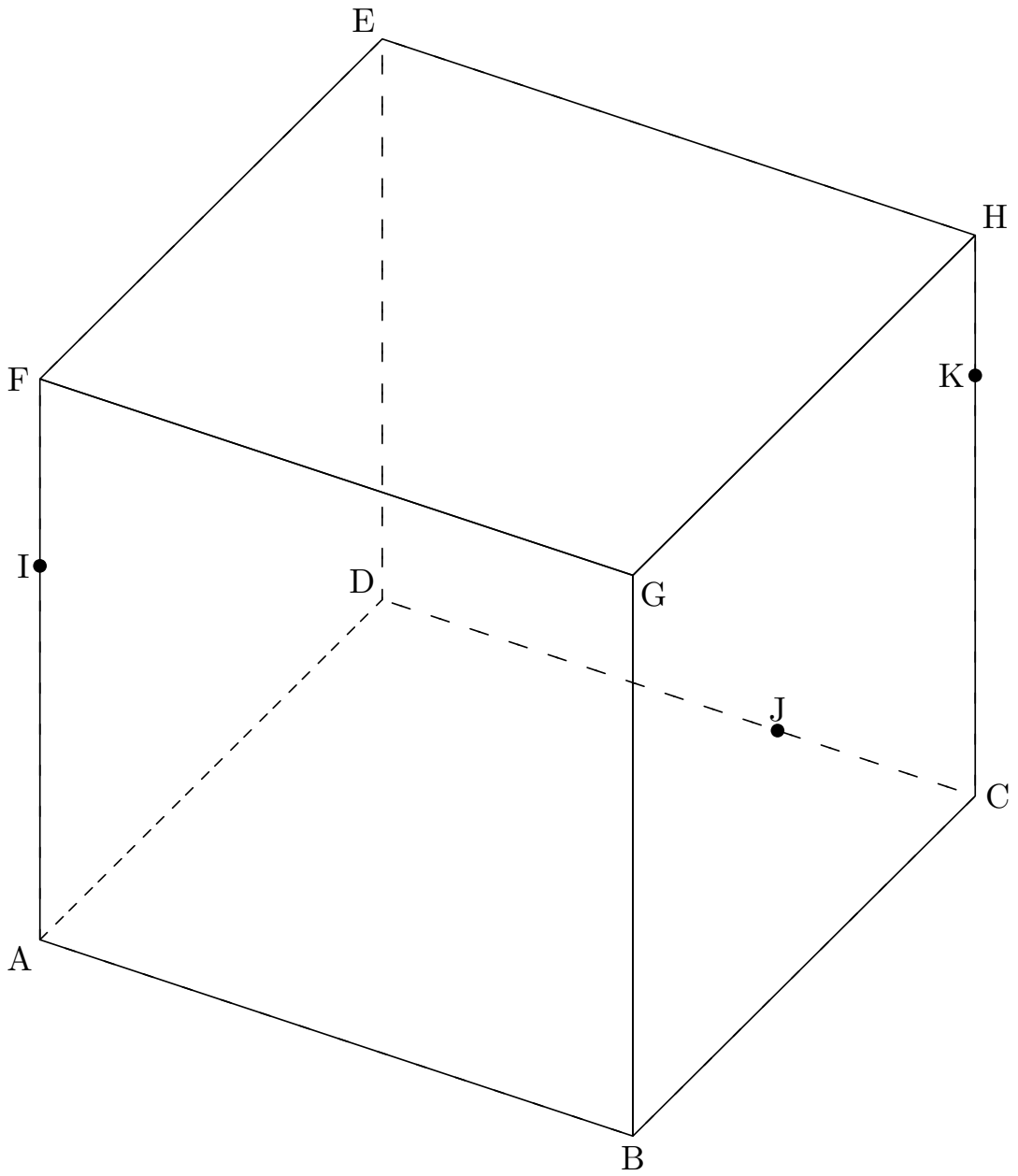
E
H
F
K
I
D
G
J
C
A
B

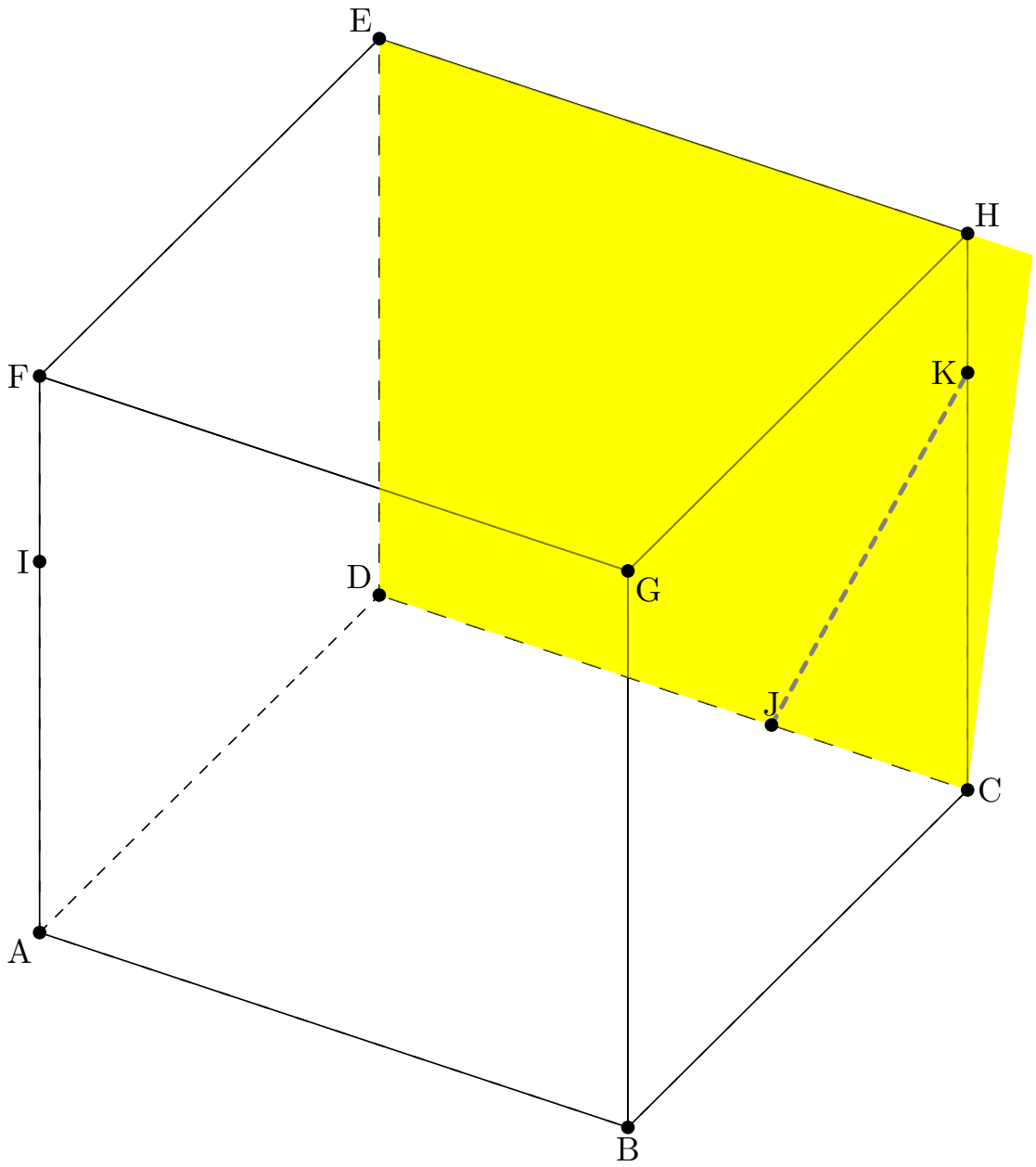
E
H
F
K
I
D
G
J
C
A
B

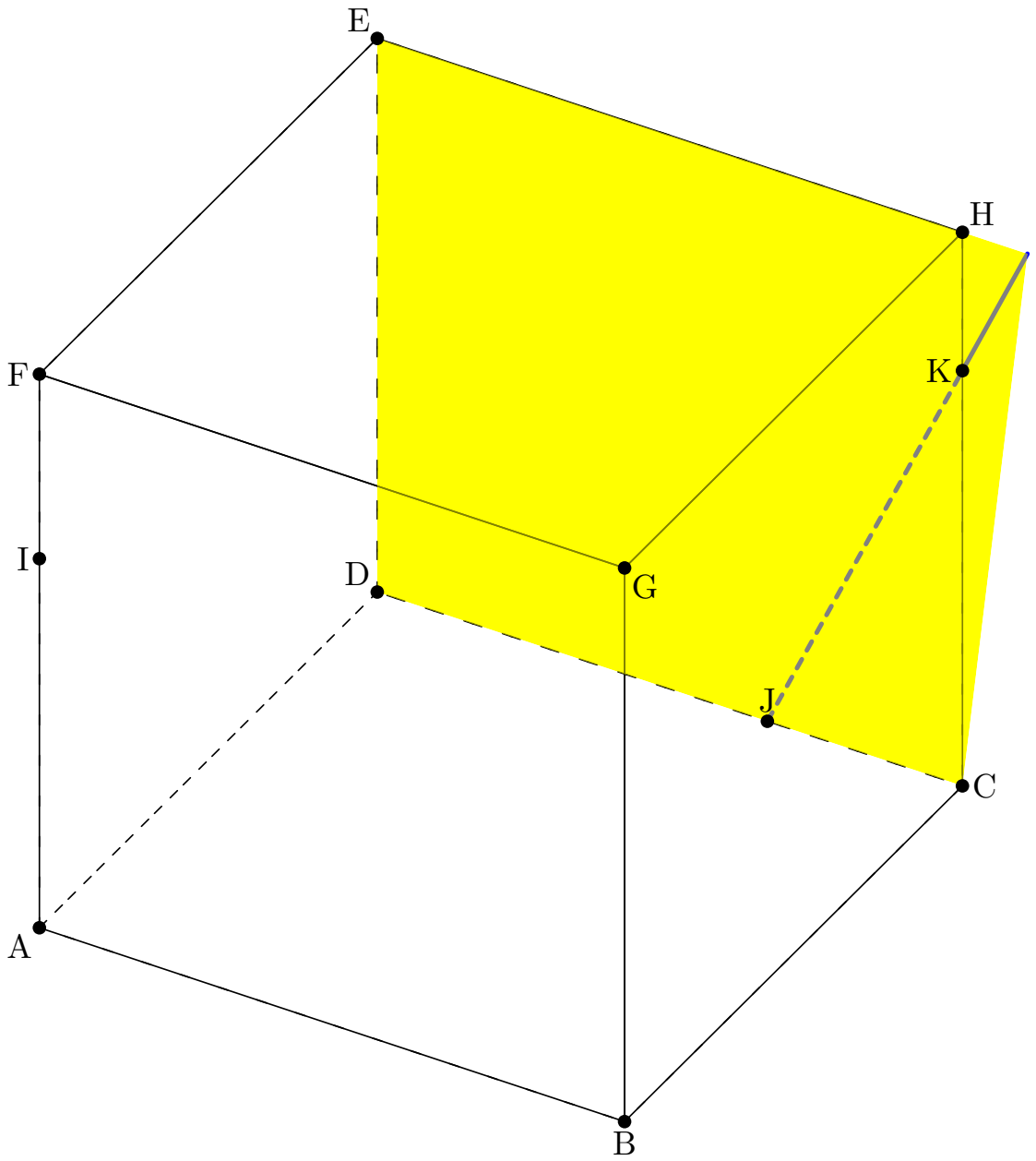
E
H
F
K
I
D
G
J
C
A
B

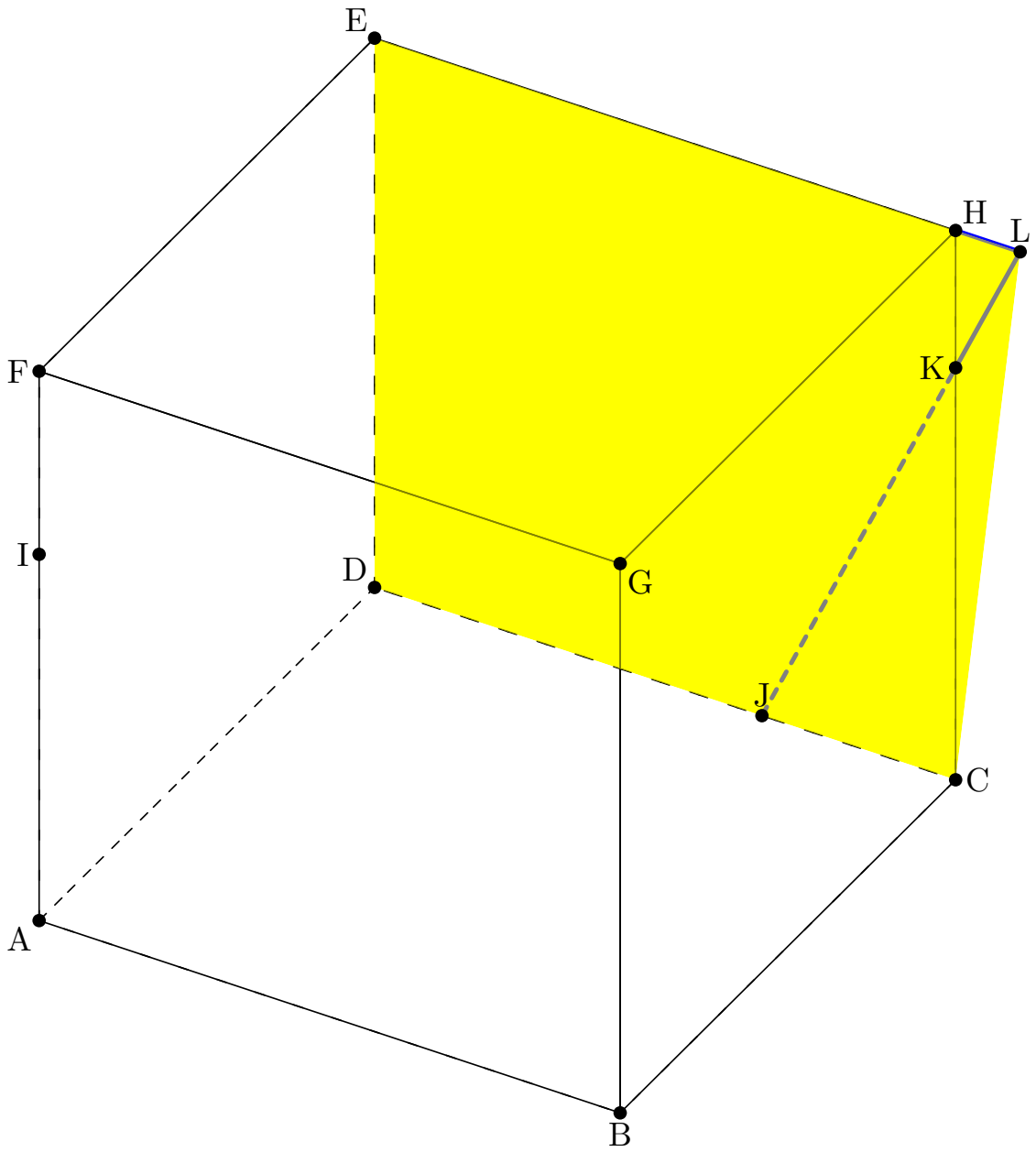
E
H
L
F
K
I
D
G
J
C
A
B

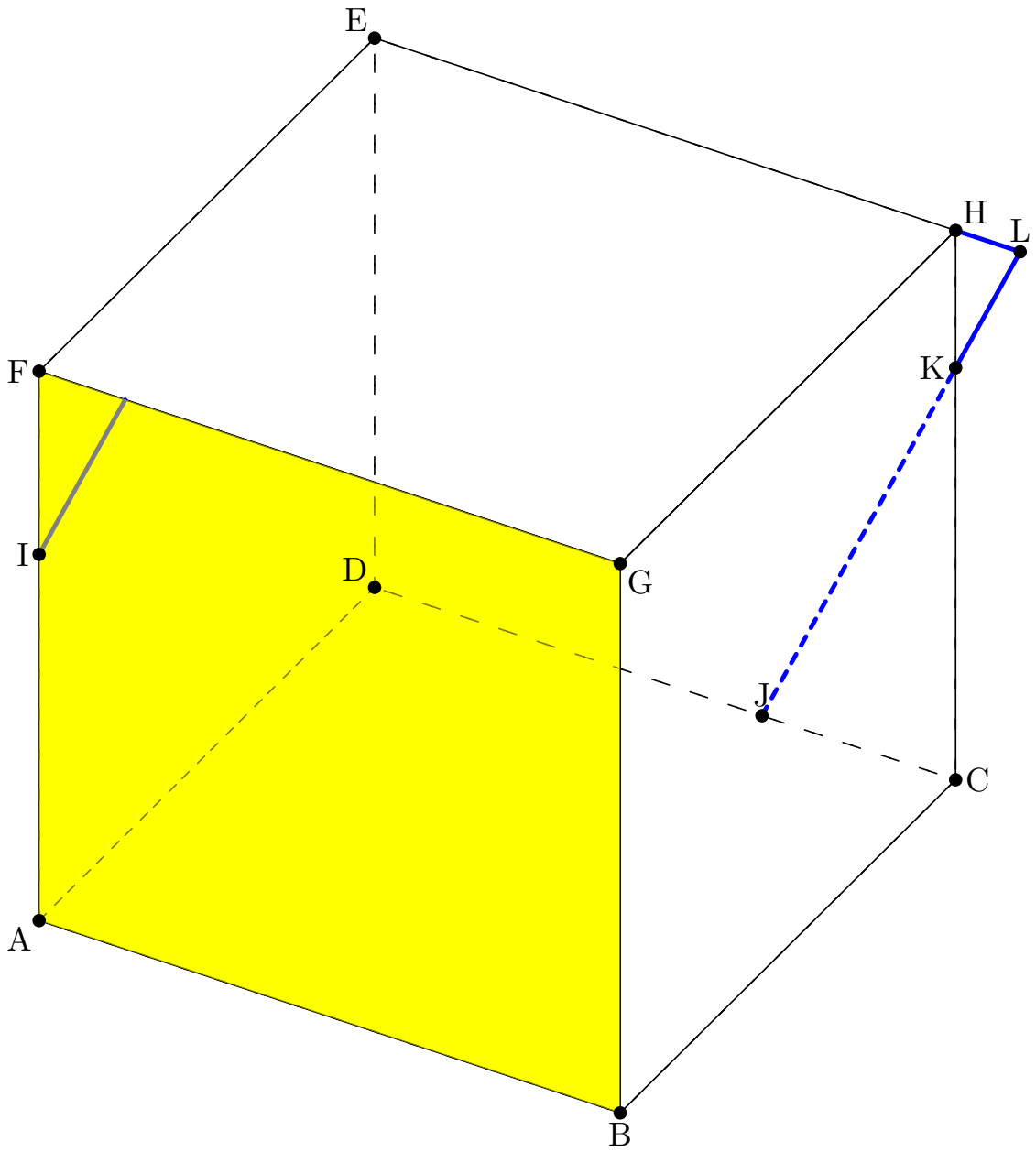
E
H
L
F
K
I
D
G
J
C
A
B

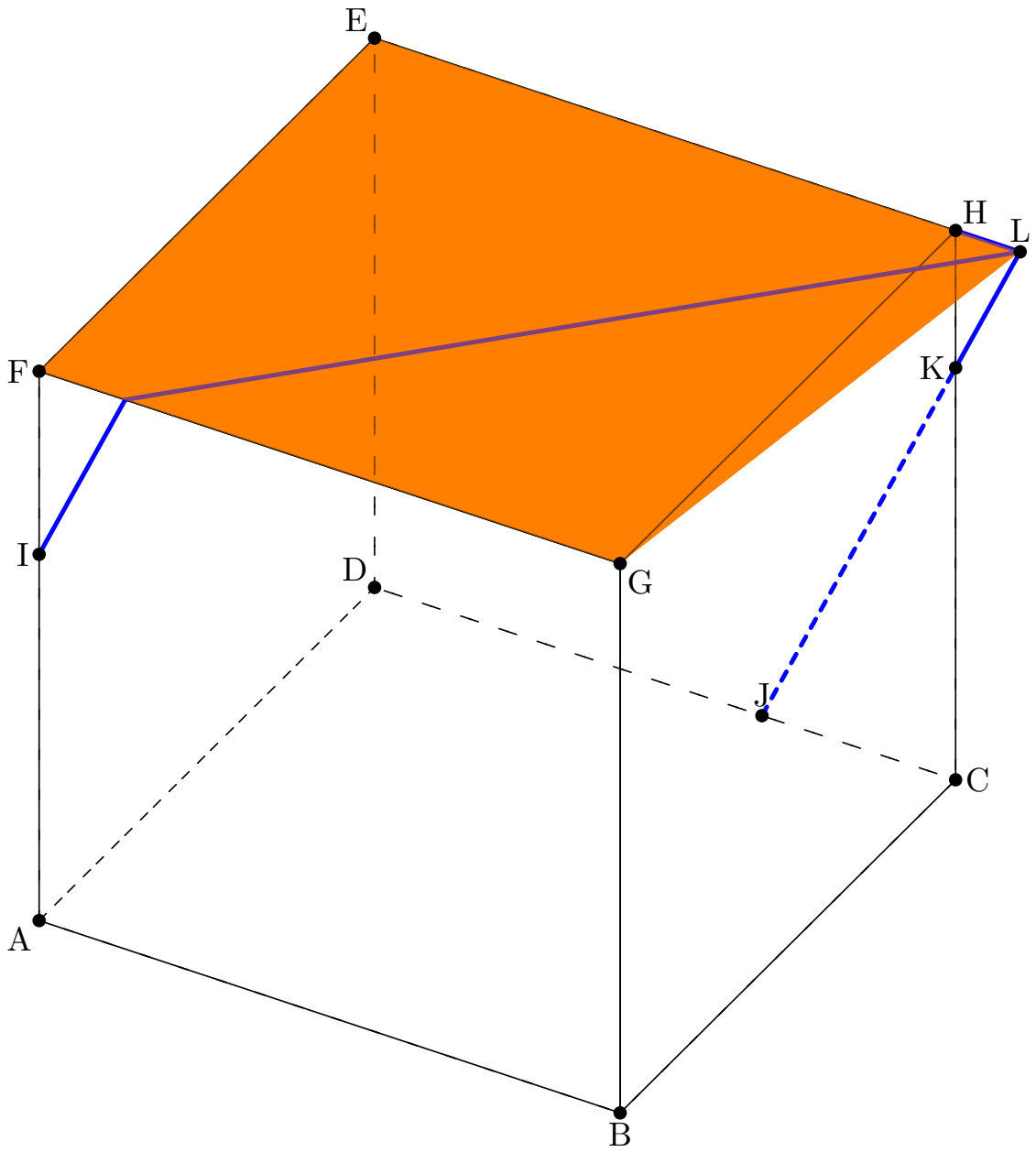
E
H
L
F
K
I
D
G
J
C
A
B

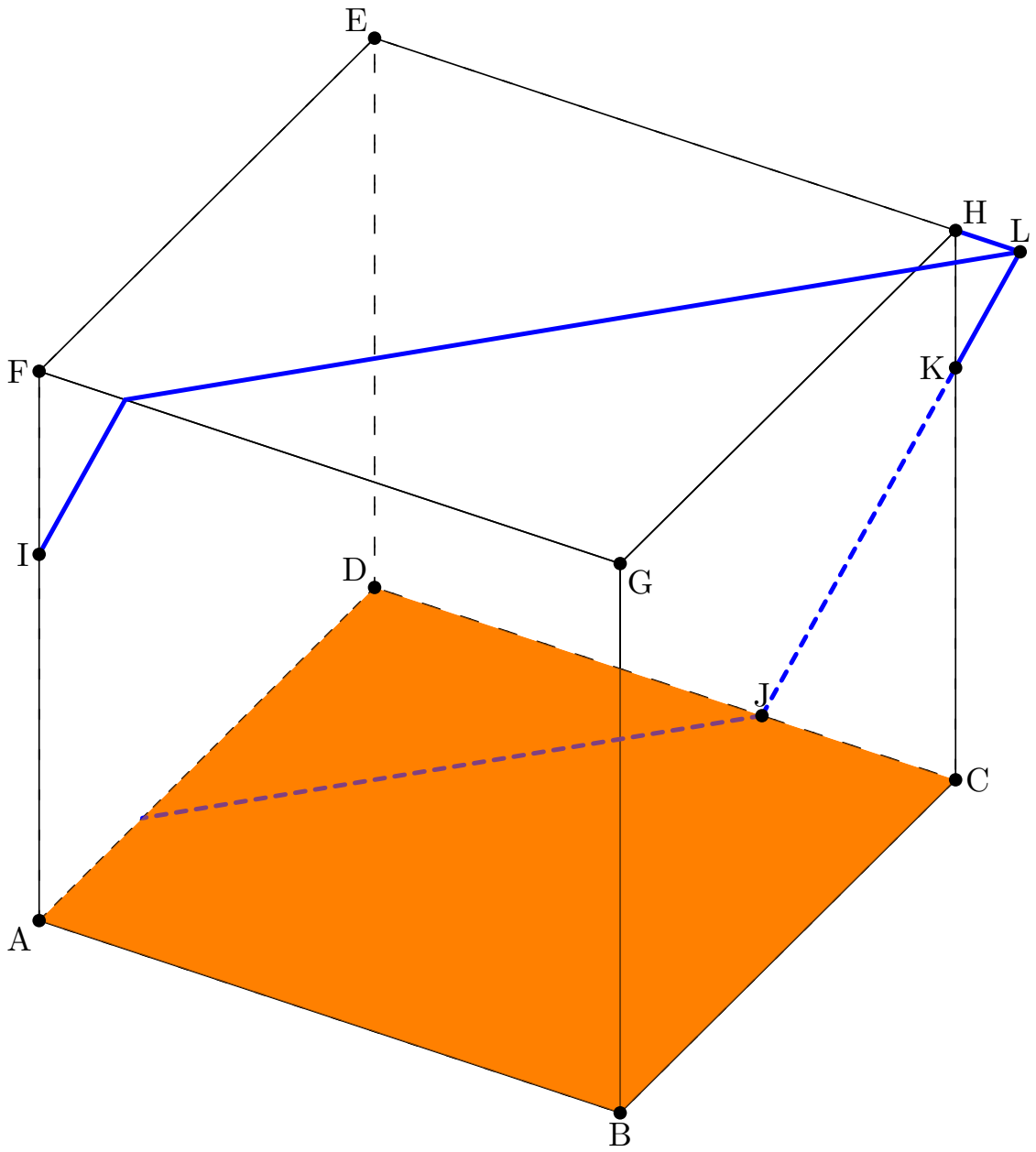
E
H
L
F
K
I
D
G
J
C
A
B

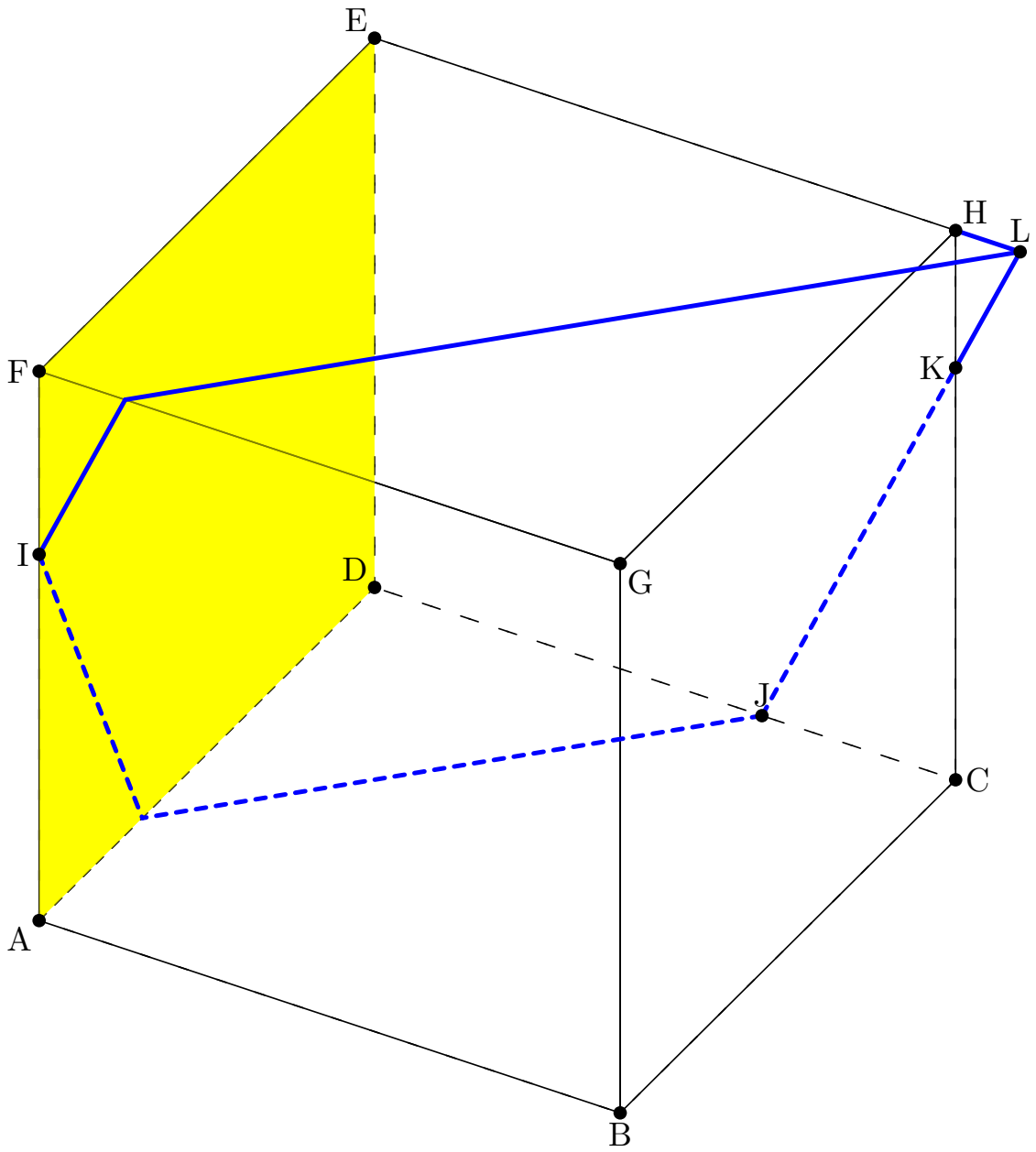
E
H
L
F
K
I
D
G
J
C
A
B

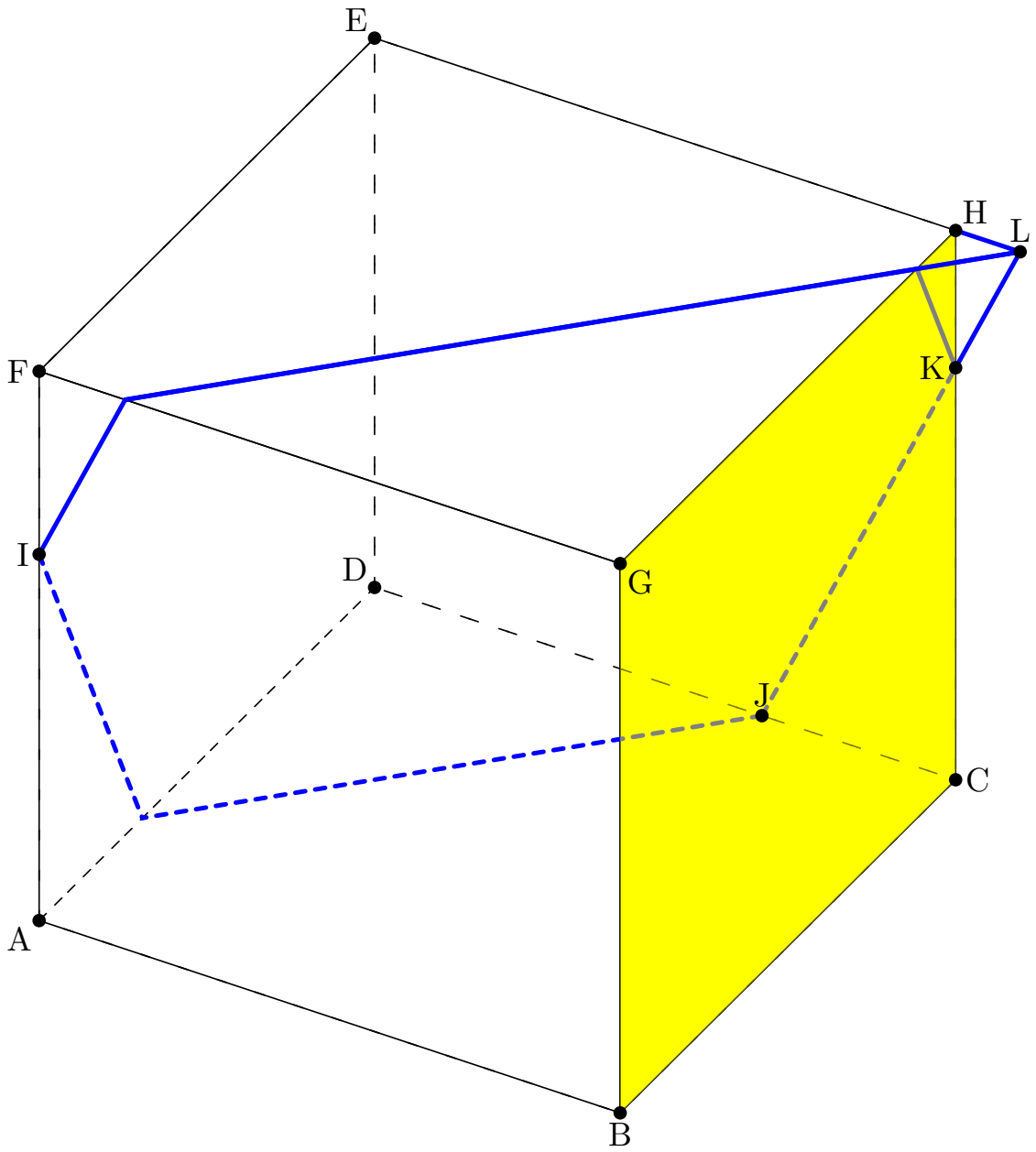
E
H
L
F
K
I
D
G
J
C
A
B

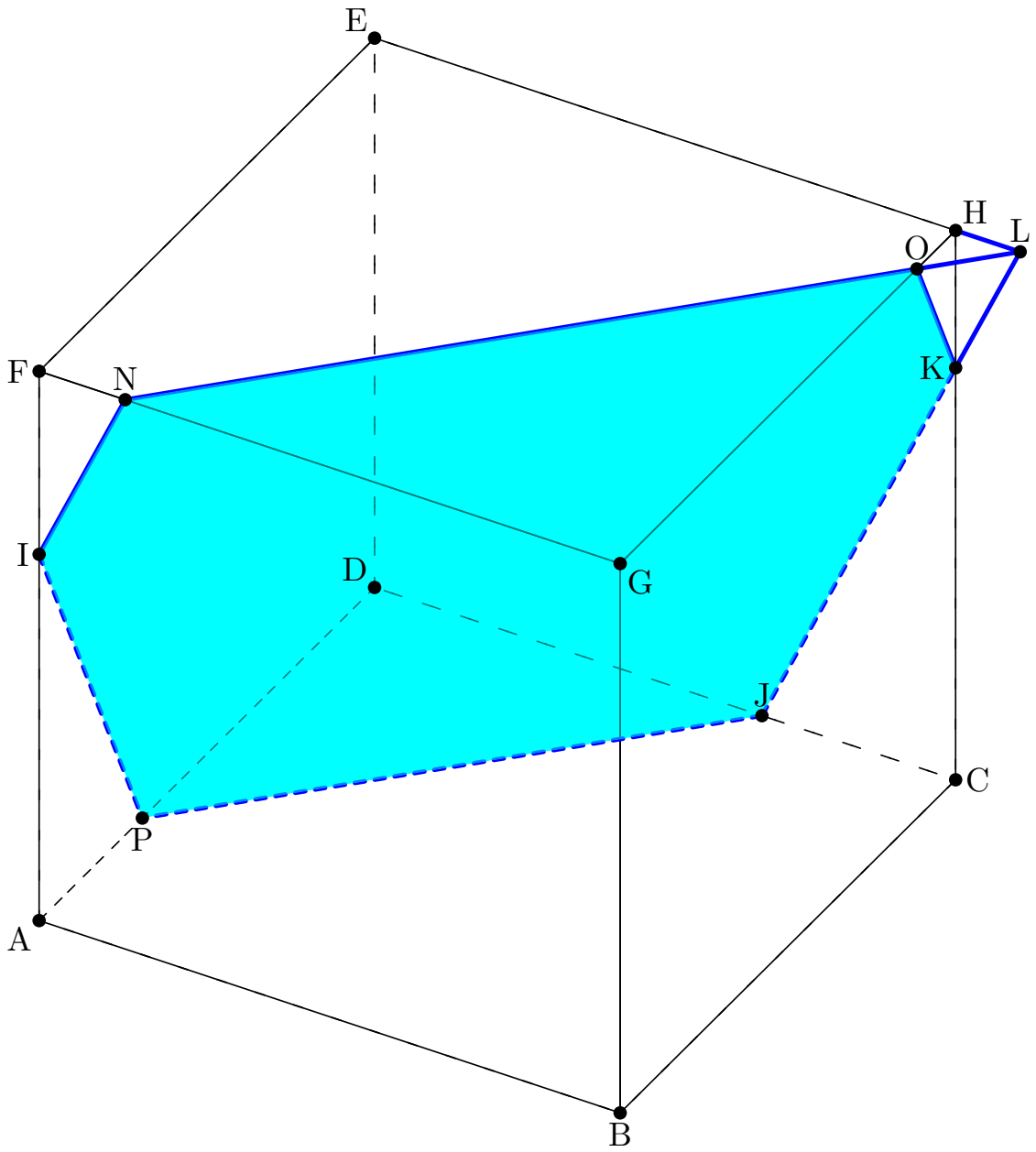
E
H
L
O
F
N
K
I
D
G
J
C
P
A
B

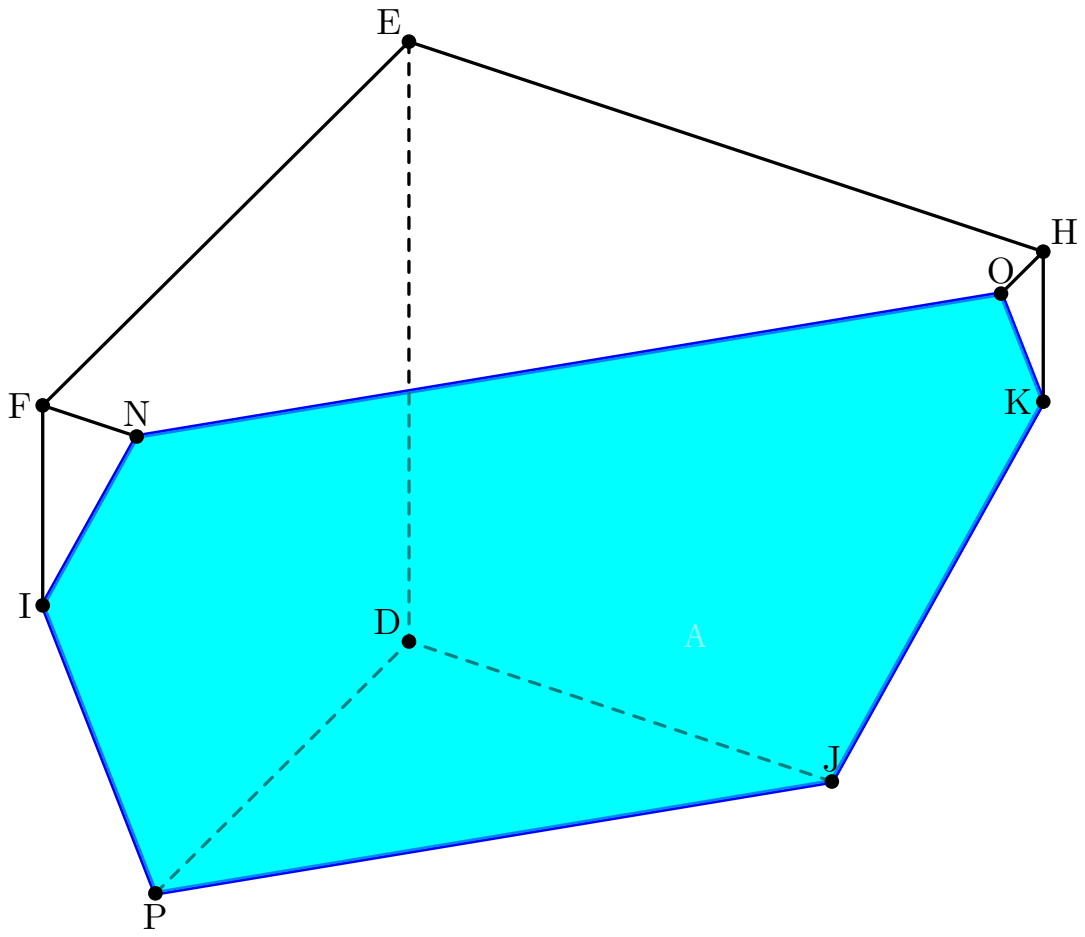
E
H
Q
F
N
K
I
D
A
J
P